CIXI WANJIE ELECTRONIC CO., LTD

THE SPEC SHEET

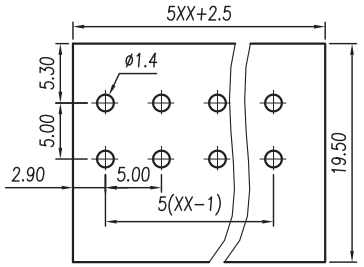

P.C.B. LAYOUT

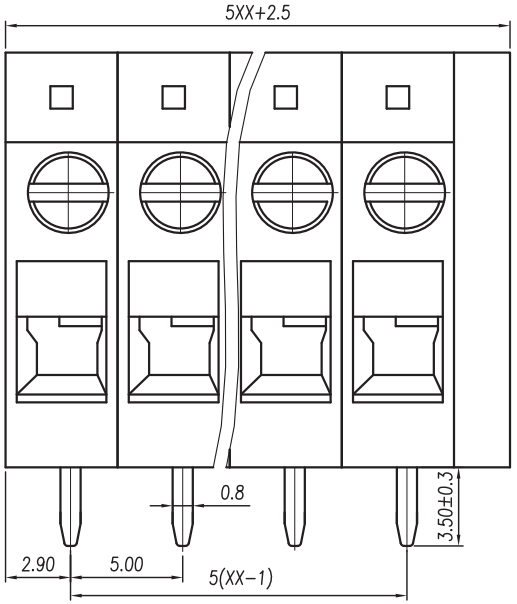

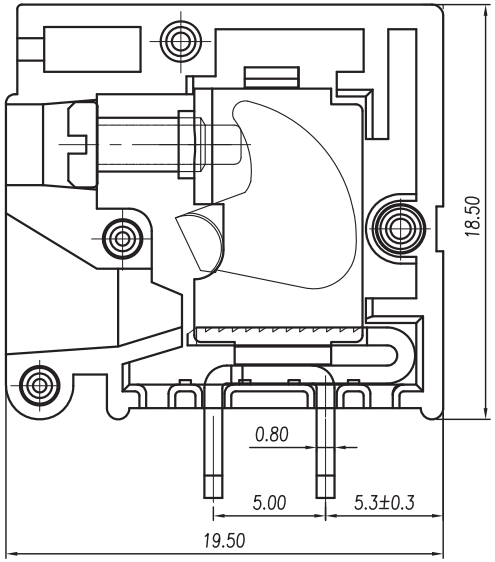

Electrical

Standard	UL	IEC
Rated voltage	300V	250V
Rated current	20A	24A
Contact resistance	20mΩ	
Insulation resistance	500MΩ/DC500V	
Wire range	24~12AWG	2.5mm²
Wrth standing voltage	AC 2000V/1 Min	

Mechanical

Torque(Max)	0.4Nm(3.6Lb.in)
Temp.Range	-40°C~+105°C
MAX Soldering	+250°C, for 5 Sec
Steip Length	12-13mm

Dimensions

Pitch	5.0mm
Poles	2~30p

Material

Housing	PA66，UL94V-0
Screws	M2.5 Steel Zn plated
Pin header	Copper alloy, Sn plated
Cage	Copper alloy,Ni plated
Slide block	Steel Zn plated

	linear dimension(Tolerances Standard GB/T 14486-2008)											⌯	—	▱	//	⊥
variable range	to 6	over 6 to 10	over 10 to 18	over 18 to 30	over 30 to 50	over 50 to 80	over 80 to 120	over 120 to 160	over 160 to 200	over 200 to 250	over 250 to	all	to 5	over 5 to 30	over 30 to 120	over 120 to
tolerance	±0.1	±0.14	±0.19	±0.25	±0.32	±0.43	±0.57	±0.72	±0.88	±1.05	±1.25	0.5	0.025	0.06	0.12	0.4

UNITS	mm	SIZE	A4	SCALE	3:1	THIRD ANGLE PROJECTION
CIXI WANJIE ELECTRONIC CO., LTD						TITLE WJ105R-5.0-XXP-1YY-00A