CIXI WANJIE ELECTRONIC CO., LTD

THE SPEC SHEET

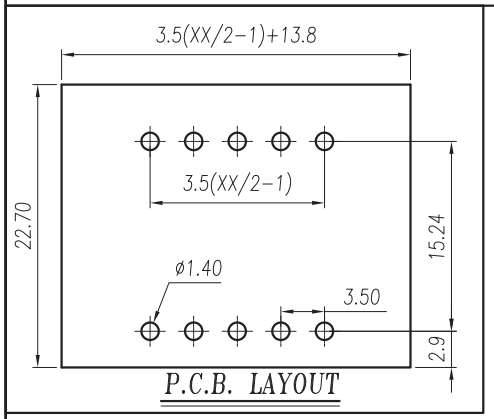

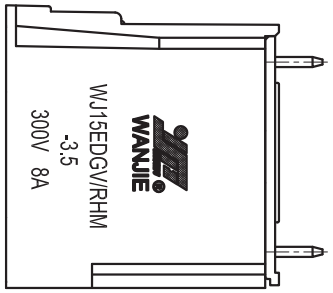

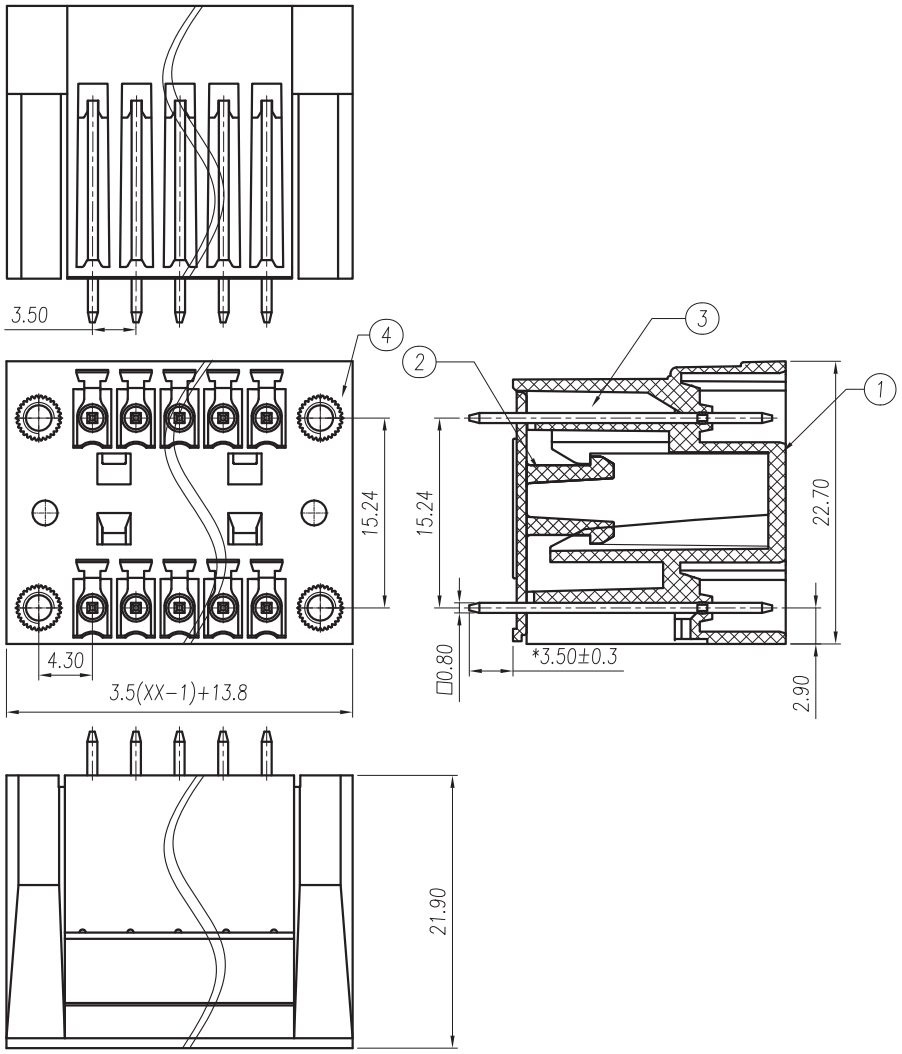

Electrical

Standard	UL	IEC
Rated voltage	300V	250V
Rated current	8A	10A
Contact resistance	20mΩ	
Insulation resistance	500MΩ/DC500V	
Wrth standing voltage	AC 2000V/1 Min	

Mechanical

Temp.Range	-40°C~+105°C
Temp.Range	+250°C 5 Sec

Dimensions

Pitch	3.5mm
Poles	2*2~2*24p

Material

Housing	PA66，UL94V-0
Pin header	Brass ,Tin plated
Nut	Brass

	linear dimension(Tolerances Standard GB/T 14486-2008)											⌯	—	▱	//	⊥
variable range	to 6	over 6 to 10	over 10 to 18	over 18 to 30	over 30 to 50	over 50 to 80	over 80 to 120	over 120 to 160	over 160 to 200	over 200 to 250	over 250 to	all	to 5	over 5 to 30	over 30 to 120	over 120 to
tolerance	±0.1	±0.14	±0.19	±0.25	±0.32	±0.43	±0.57	±0.72	±0.88	±1.05	±1.25	0.5	0.025	0.06	0.12	0.4

UNITS	mm	SIZE	A4	SCALE	5:3	THIRD ANGLE PROJECTION
CIXI WANJIE ELECTRONIC CO., LTD						TITLE WJ15EDGVHM-3.5-2*XXP-1YY-00A