# CIXI WANJIE ELECTRONIC CO., LTD

THE SPEC SHEET

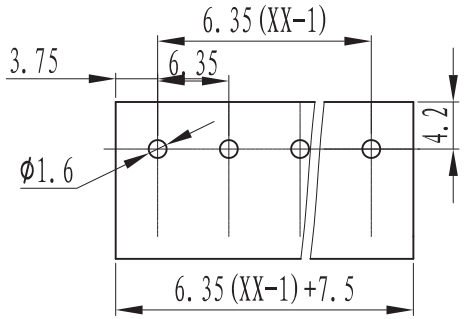


P.C.B. LAYOUT

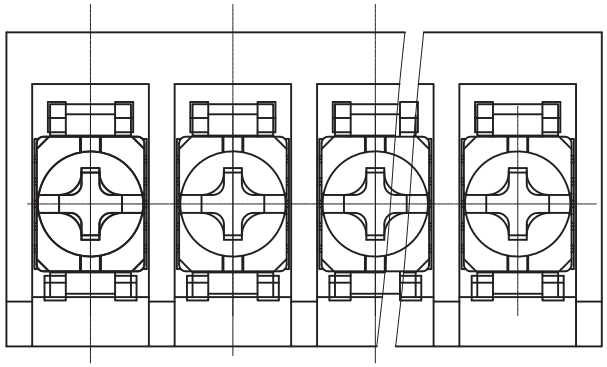

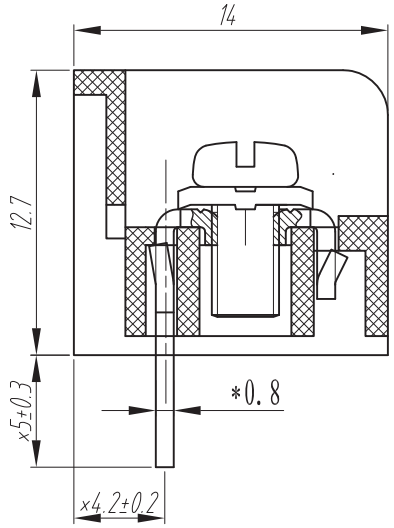


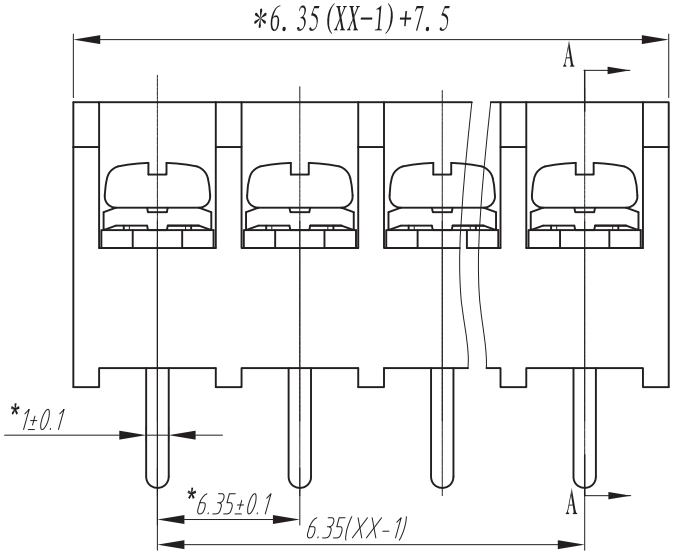


## Electrical

| | | |
|---|---|---|
| Standard | UL | IEC |
| Rated voltage | 300V | 450V |
| Rated current | 10A | 13.5A |
| Contact resistance | 20mΩ | |
| Insulation resistance | 500MΩ/DC500V | |
| Wire range | 22~16AWG | 1mm² |
| Wrth standing voltage | AC 2000V/1 Min | |

## Mechanical

| | |
|---|---|
| Torque | 0.5Nm(4.5Lb.in) |
| Temp.Range | -40°C~+105°C |
| MAX Soldering | +250°C, for 5 Sec |

## Dimensions

| | |
|---|---|
| Pitch | 6.35mm |
| Poles | 2~30p |

## Material

| | |
|---|---|
| Housing | PA66，UL94V-0 |
| Screws | M3.0 Steel Ni plated |
| Pin header | Brass 0.8t Tin plated |

| | linear dimension(Tolerances Standard GB/T 14486-2008) | | | | | | | | | | | ⌯ | — | ▱ | // | ⊥ |
|---|---|---|---|---|---|---|---|---|---|---|---|---|---|---|---|---|
| variable range | to 6 | over 6 to 10 | over 10 to 18 | over 18 to 30 | over 30 to 50 | over 50 to 80 | over 80 to 120 | over 120 to 160 | over 160 to 200 | over 200 to 250 | over 250 to | all | to 5 | over 5 to 30 | over 30 to 120 | over 120 to |
| tolerance | ±0.1 | ±0.14 | ±0.19 | ±0.25 | ±0.32 | ±0.43 | ±0.57 | ±0.72 | ±0.88 | ±1.05 | ±1.25 | 0.5 | 0.025 | 0.06 | 0.12 | 0.4 |

| UNITS | mm | SIZE | A4 | SCALE | 3:1 | THIRD ANGLE PROJECTION |
|---|---|---|---|---|---|---|
| CIXI WANJIE ELECTRONIC CO., LTD | | | | | | TITLE WJ16-XXP-1YY-00A |